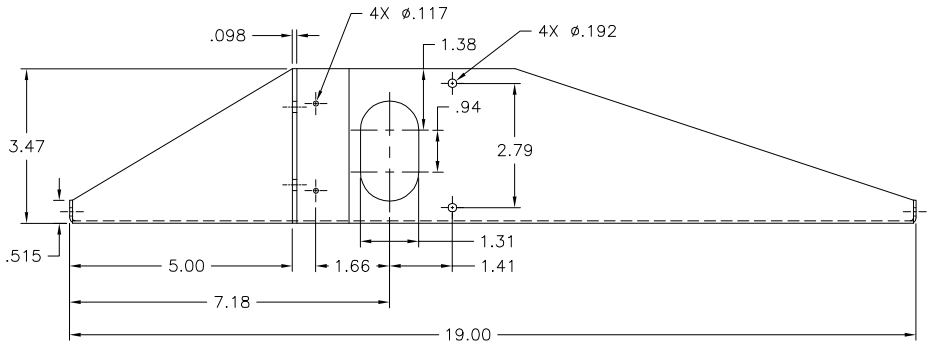

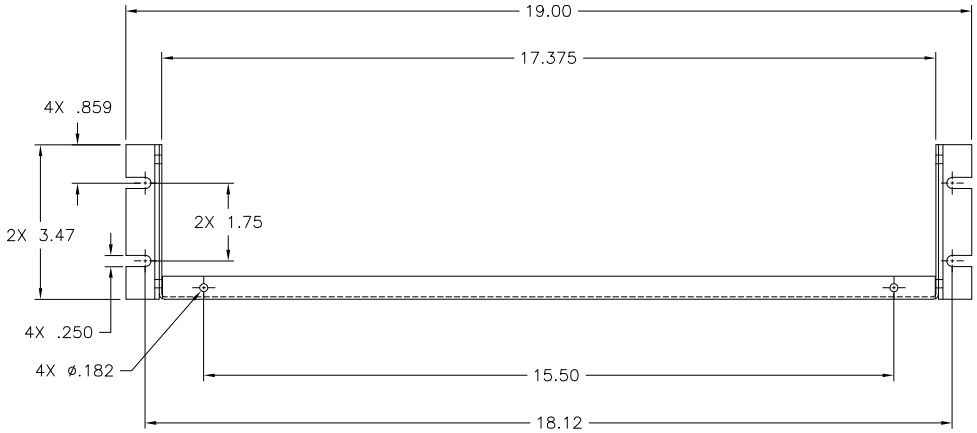

REDUCED
NO SCALE

INVENTORS

HellermannTyton
A SPIRENT Company

ALL PROPRIETARY RIGHTS IN THE SUBJECT MATTER SHOWN ON THIS DRAWING ARE EXCLUSIVE PROPERTY OF HELLERMANNTYTON

name	date	city, state

NOTES

REVISION

DRAWING

level	01
date	07/31/02
by	AAC
ECN #	003294
part level	A

DIMENSIONS

TOLERANCES

.XXXX=
.XXX= ±.005
.XX= ±.03
.X=
∠=
unless otherwise specified

units inches

PART

number	T19X195CW	phase	PRODUCTION
name	CENTER WEIGHT EQUIPMENT SHELF		
material	16 GA(.0598) CRS INDUSTRIAL BLACK SATIN		

DRAWING

FORMAT C version M	CAD ACAD	scale 2X	
computer file number MI\CST\3008002_01	previous number		
drawn AAC	checked	approved	
07/31/02			
type CUSTOMER	sheet 1 of 1		
number MI3008002CST			